Kiran Khatri ID: 923750019
Github: khatri5034 CSC615 Embedded Linux

Assignment 2 – Tapeless Ruler

Description:
This assignment implements a tapeless ruler (distance measurement) using an HC-SR04 ultrasonic sensor connected to a Raspberry Pi. The program measures distance in centimeters and prints the result to the console in a continuous loop; as an object is moved toward or away from the sensor, the distance is updated on the screen.

The implementation uses `direct memory-mapped GPIO access`, the code opens the `/dev/mem file` and uses `mmap()` to map the GPIO peripheral block into user space. It then reads and writes the GPIO registers (GPFSEL, GPSET, GPCLR, GPLEV) to configure the trigger pin as output and the echo pin as input, drive the trigger pulse, and read the echo pin level. Precise timing for the echo pulse width is obtained with a monotonic clock (microseconds). The measured round-trip time is converted to one-way distance in centimeters using the speed of sound (343 m/s). hardware.

Approach / What was my:
I will select two GPIO pins on the Raspberry Pi: one for the ultrasonic sensor Trigger (output) and one for Echo (input). I will define macros in the code (TRIG_PIN and ECHO_PIN) to match each pin. I will connect the ultrasonic sensor to the Pi according to its datasheet: VCC to 5V, GND to ground, Trigger to the chosen trigger GPIO, and Echo to the chosen echo GPIO.I will ensure the wiring matches the pin numbers in my code.

I will define the correct peripheral base address for my Raspberry Pi model so that the memory mapping points to the GPIO registers. I will open the /dev/mem file and use mmap() to map the GPIO register block into user space. I will create functions to set a GPIO pin as output or input (using the GPFSEL registers), to set a pin high (GPSET), to clear a pin (GPCLR), and to read a pin level (GPLEV). I will also implement a function that returns the current time in microseconds using a monotonic clock, so that the echo pulse width can be measured accurately. I will put these in a setup module (assignment2_setup.c and assignment2_setup.h) so that main does not need to know the register layout.

In the main program I will call the setup function once to map the GPIO registers, then set the trigger pin as output and the echo pin as input. I will implement an infinite loop that: (1) pulses the trigger pin high for a short time (10 µs) to start a measurement; (2) waits for the echo pin to go high (sensor has sent the burst) and records the start time; (3) waits for the echo pin to go low (echo received) and records the end time; (4) computes the duration in microseconds and converts it to one-way distance in centimeters using the speed of sound and dividing by 2 for the round-trip; (5) prints the distance to the console and pauses before the next reading. I will implement the loop to make sure i am not in infinite loop waiting for the signal to come back.

Issues and Resolutions:
My first issue was: When compiling with gcc, the linker reported multiple definition of “gpio”, “gpio_map”, and “mem_fd”.

Kiran Khatri ID: 923750019
Github: khatri5034 CSC615 Embedded Linux

I resolved it by keeping declarations only in the header using extern. I placed the actual definitions in exactly one file, assignment2_setup.c. After that, the program linked correctly.

The second issue I had was I was defining the wrong address for GPIO which resulted in printing nothing in the console.
I resolved it by putting the correct peripheral base for my board and the GPIO offset.I used this in the mmap() call and verified that the trigger and echo pins behave as expected.

Photo of completed circuit:

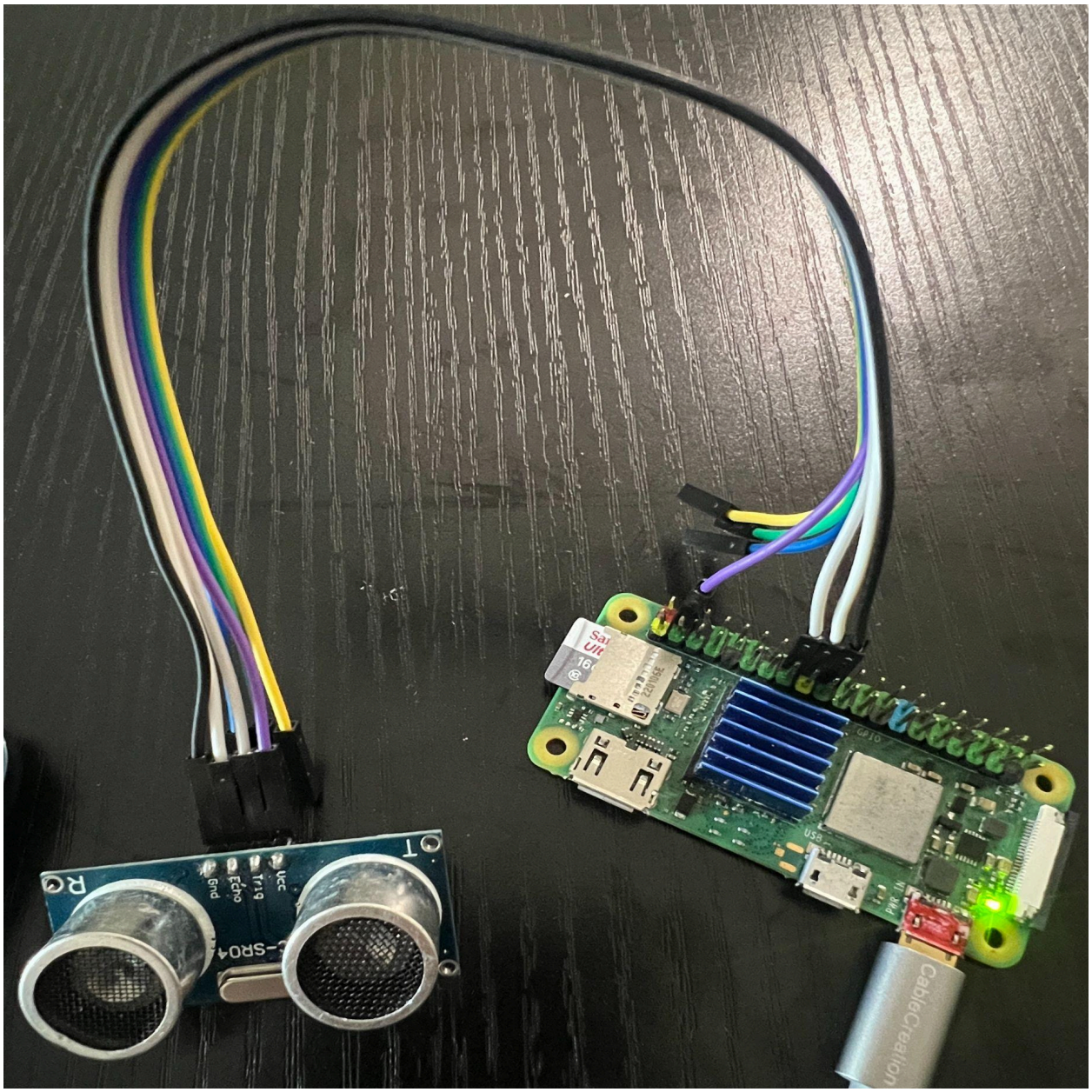

Kiran Khatri
Github: khatri5034

ID: 923750019
CSC615 Embedded Linux

Hardware Diagram:

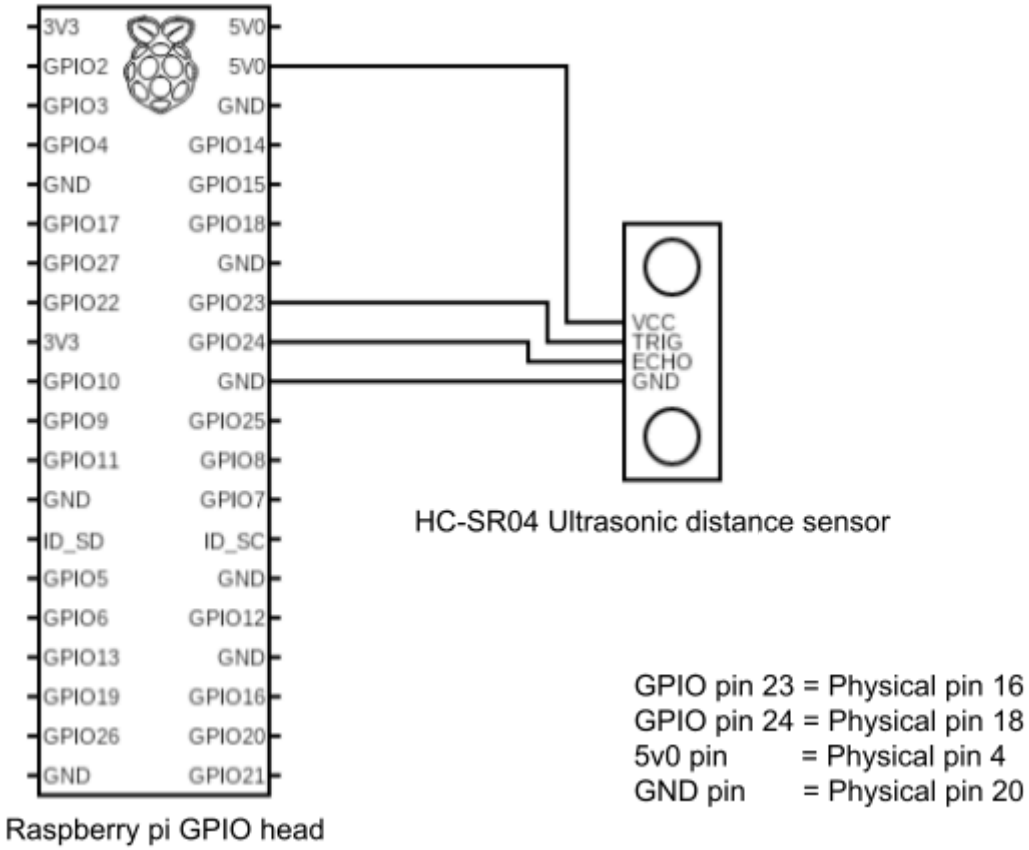

Analysis:
(If required for the assignment)

Generative AI:

Screen shot of compilation:

```
pi13@raspberrypi13:~/EmbeddedAssignment/csc-615-assignment-2-tapeless-ruler-khatri5034 $ make
gcc -c -Wall -g assignment2_main.c -o assignment2_main.o
gcc -c -Wall -g assignment2_setup.c -o assignment2_setup.o
gcc assignment2_main.o assignment2_setup.o -o assignment2
pi13@raspberrypi13:~/EmbeddedAssignment/csc-615-assignment-2-tapeless-ruler-khatri5034 $
```

Kiran Khatri
Github: khatri5034

ID: 923750019
CSC615 Embedded Linux

Screen shot(s) of the execution of the program:

```
pi13@raspberrypi13:~/EmbeddedAssignment/csc-615-assignment-2-tapeless-ruler-khatri5034 $ sudo
./assignment2
Distance: 30 cm
Distance: 33 cm
Distance: 22 cm
Distance: 5 cm
Distance: 5 cm
Distance: 6 cm
Distance: 3 cm
Distance: 3 cm
Distance: 3 cm
Distance: 4 cm
Distance: 6 cm
Distance: 11 cm
Distance: 15 cm
Distance: 17 cm
Distance: 19 cm
Distance: 22 cm
Distance: 23 cm
Distance: 26 cm
Distance: 28 cm
Distance: 30 cm
Distance: 32 cm
Distance: 33 cm
Distance: 36 cm
Distance: 40 cm
Distance: 45 cm
Distance: 45 cm
Distance: 44 cm
Distance: 47 cm
```

Kiran Khatri
Github: khatri5034


```
Distance: 47 cm
Distance: 48 cm
Distance: 49 cm
Distance: 49 cm
Distance: 49 cm
Distance: 48 cm
Distance: 41 cm
Distance: 37 cm
Distance: 34 cm
Distance: 32 cm
Distance: 29 cm
Distance: 28 cm
Distance: 23 cm
Distance: 18 cm
Distance: 16 cm
Distance: 13 cm
Distance: 11 cm
Distance: 9 cm
Distance: 7 cm
Distance: 4 cm
Distance: 4 cm
Distance: 3 cm
Distance: 2 cm
Distance: 2 cm
Distance: 3 cm
Distance: 26 cm
Distance: 38 cm
Distance: 37 cm
Distance: 146 cm
Distance: 1202 cm
```

```
Distance: 146 cm
Distance: 1202 cm
^C
pi13@raspberrypi13:~/EmbeddedAssignment/csc-615-assignment-2-tapeless-ruler-khatri5034 $
```